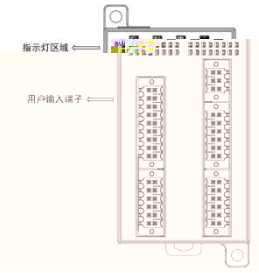
指示灯区域
用户输入端子

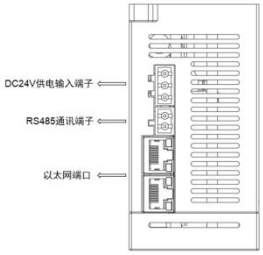
DC24V供电输入端子
RS485通讯端子
以太网端口

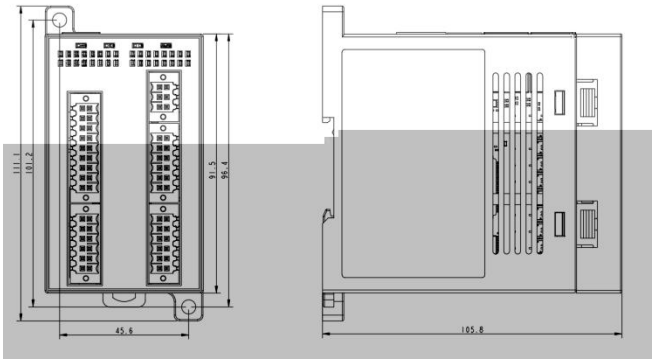
111.1
101.2
91.5
96.4
45.6
105.8

OUT01
OUT02
OUT03
L1-
L1-
LR1-
L2+
L2-
LR2-
L1+
L1-
NC
L2+
L2-
NC
24V+
24V-
PF

⏚	

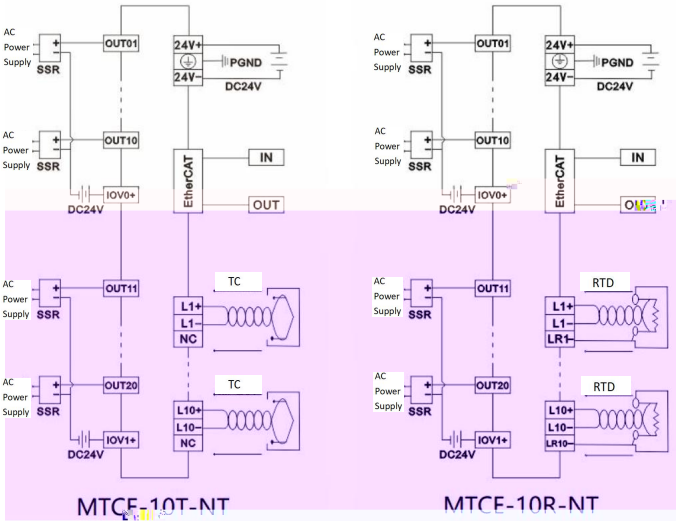
AC Power Supply
SSR
OUT01
OUT10
OUT11
OUT20
IOV0+
IOV1+
DC24V
24V+
24V-
PGND
EtherCAT
IN
OUT
TC
L1+
L1-
NC
L10+
L10-
MTCE-10T-NT
RTD
LR1-
LR10-
MTCE-10R-NT